Created by SnapGene

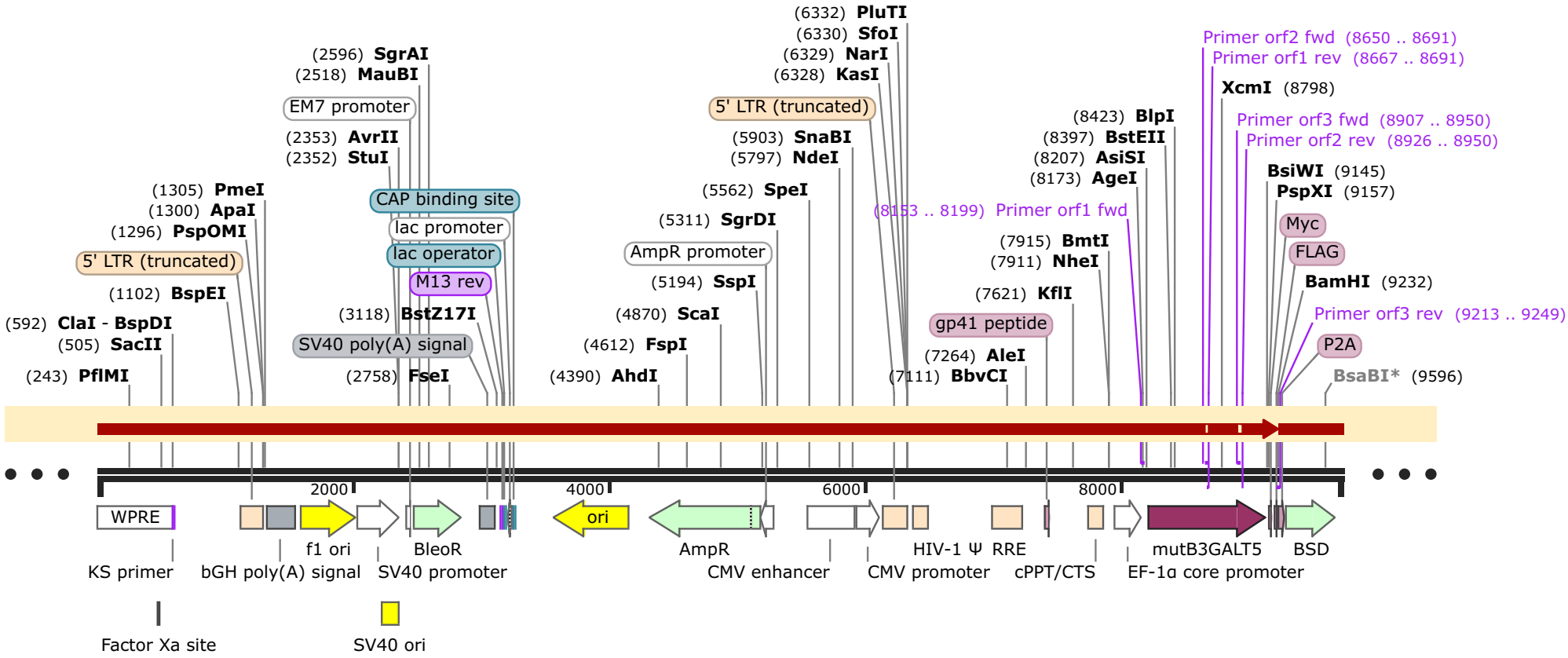

lentiMutB3GALT5-blast_D156A_D243A
9719 bp