Created by SnapGene

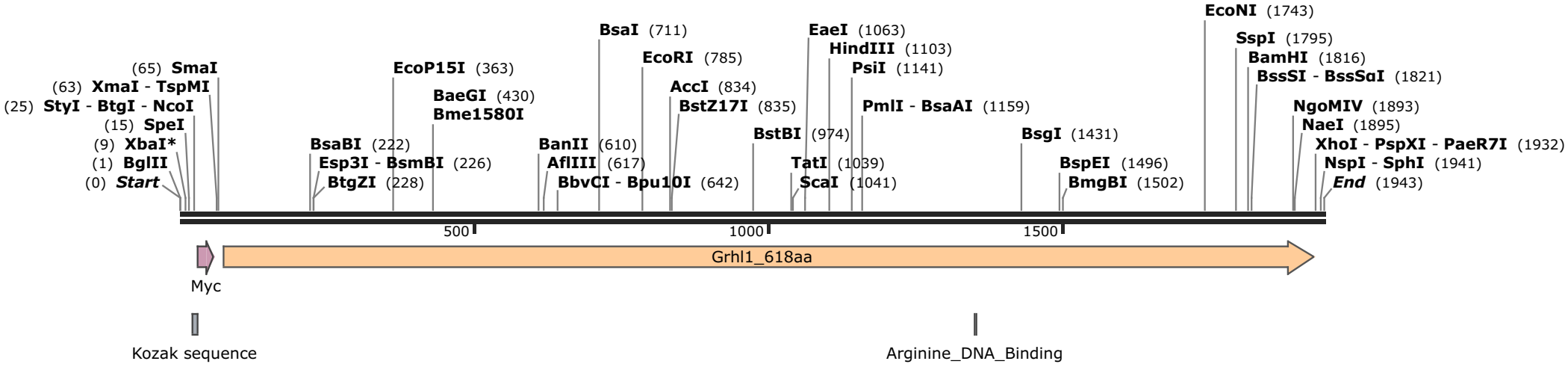

pGlomyc_Grhl1_618aa_3.0
1943 bp